VILLAGE OF MCFARLAND *NOTICE OF PUBLIC MEETING*

# Public Utilities Committee

**Tuesday, December 17, 2019** **6:00 PM** **McFarland Municipal Center**
*Conference Room A*

AGENDA

1. CALL TO ORDER, ROLL CALL.

2. PUBLIC APPEARANCES.

3. APPROVAL OF MINUTES.
   a. Discussion and action regarding the minutes from the Public Utilities/Works joint meeting held on November 19, 2019.

   b. Discussion and action regarding the minutes from the Public Utilities meeting held on November 19, 2019.

4. BUSINESS.
   a. Discussion and action to make a recommendation to the Village Board regarding the creation of a billing dispute policy and revisions to the billing dispute ordinance for sanitary sewer services.

   b. Update on the sewer rate study.

   c. Discussion and action to make a recommendation to the Village Board on purchasing "No Fault Sewer" extended coverage through the League of Wisconsin Municipalities Mutual Insurance Carrier.

   d. Discussion on drainage improvements adjacent to the Lower Yahara Trail generally located on Elvehjem Road near Hidden Farm Road.

   e. Discussion and action to make a recommendation to the Village Board regarding a the Request For Proposals for yard waste and drop off site services

   f. Presentation of the Public Works Monthly Report from the Director.

5. SCHEDULE NEXT MEETING DATE.
   a. Tuesday January 21, 2020 at 6:00 pm

6. ADJOURNMENT.

This meeting notice constitutes an official meeting of the above referenced group and was posted in accordance with all applicable laws related to Open Meetings Law. It is possible that members of and possibly a quorum of members of other governmental bodies of the municipality may be in attendance at the above stated meeting to gather information. No action will be taken by any governmental body at the above stated meeting other than the governmental body specifically referred to above in this notice. Upon reasonable notice, efforts will be made to accommodate the needs of disabled individuals. For additional information or to request this service, contact the McFarland Municipal Center at (608) 838-3153 or cassandra.suettinger@mcfarland.wi.us.

VILLAGE OF MCFARLAND

**Public Utilities/Works Joint Committee Minutes**

Tuesday November 19, 2019 – 6:00 P.M.

1. CALL TO ORDER, ROLL CALL

   The meeting was called to order by Village Trustee and Public Utilities Committee Chairperson Mary Pat Lytle at 6:00 p.m.

   Members present: Village Trustee Eric Kryzenske, Village Trustee Jerry Adrian, Village Trustee Dan Kolk, Pauline Boness, Marc Nielsen, Chris Fredrick, Richard Vela, Marv Meyers. *Absent*: Terry Lawrin, Elizabeth Bohuski

   Staff present: Jim Hessling (Director of Public Works/Utilities), Aimee Irwin (Assistant to the Director), Brian Berquist (Town & Country Engineering), Tim Stieve (Town & Country Engineering), Matt Schuenke (Village Administrator)

2. PUBLIC APPEARANCES

   John Reed, Heleen Hayden, Janice Rothamer, Sally Hansen, Kathy Pease

3. BUSINESS
   a. <u>Presentation from Maddrell Contractors regarding 2019 Street Construction</u>
      - Josh Ula, owner of Maddrell Contractors, provided an explanation regarding changes to the construction plan. Josh stated that the construction was delayed due to weather but any unfinished work will be completed the in the spring of 2020.
      - Committee members brought items to the contractor's attention regarding their observations. Marv Meyers spoke to the soft spots on Tina Lane. Richard Vela asked for clarification from Town & Country Engineering regarding the due date that was set with the project. Brian Berquist stated that the due date was October 31, 2019.
   b. <u>Discussion and action on drainage improvements adjacent to the Lower Yahara Trail generally located on Elvehjem Road near Hidden Farm Road</u>
      - Public Appearance by John Reed. John presented his concern regarding pumping concerns of this area related to his property at 6406 Hidden Farm Road.
      - Brian Berquist provided background information regarding the pathway around Elvehjem Road after obtaining more survey information of the area. Brian stated that the drainage area near the Creamery Elvehjem transition point is not performing as it constructed. There are several approaches to improve this area such as having the ditching redone. Brian stated to improve the

area at the north edge of Creamery Elvehjem road the plans include curb and gutter. Brian also included that near the east end by Holscher Road improvements could include more robust storm sewer work and re-grading the area.

- Brian transitioned to background information regarding the sump pump line routing. He stated this would tie into existing stormwater inlets and place a “t” at each home to allow the property’s sump pump discharge to be connected. Brian stated the same idea would be applied to the Sighting and Marsh Woods Drive area. He also stated that this idea has known success in the Village.
- Marc Nielsen clarified that the sump pump would be a gravity fed system to which Brian stated is correct. Brian included that the resident would need to make the necessary changes to hook into this system from their property.
- Mary Pat Lytle clarified if the pathway would be raised for the current low portion that has had a pooling concern with water. Brian stated the plans would lower the ditch rather than raising the pathway.
- Chris Fredrick clarified if those residents to the west would be included in this project. Brian stated it was not included in the original plan but something to consider.
- Richard Vela asked what size piping is included with the plan. Brian stated the piping would likely be 8 inch PVC.
- Dan Kolk stated the pathway may need adjustment as well given that pictures appear to show the changes that have occurred on the pathway.
- Matt Schuenke clarified that the funds are available for this project in the 2020 budget.
- Pauline Boness asked to investigate if there were improvements escrowed for Elvehjem Road.
- Brian will re-present at the next Public Utilities meeting in December including design, bid and construction plan.

c. <u>Presentation of the Public Works Monthly Report from the Director</u>
    - Jim Hessling provided an update on public works activities in the Village for the month of October 2019.

4. ADJOURNMENT
    a. Motion by Mary Pat Lytle to adjourn at 6:50 p.m. Seconded by Dan Kolk. Motion passed 9-0-0.

VILLAGE OF MCFARLAND

**Public Utilities Committee Minutes**

Tuesday November 19, 2019 – 6:55 P.M.

1. CALL TO ORDER, ROLL CALL

   The meeting was called to order by Village Trustee and Chairperson Mary Pat Lytle at 6:55 p.m.

   Members present: Village Trustee Eric Kryzenske, Pauline Boness, Marc Nielsen. Chris Fredrick attended the Public Works Committee Meeting.

   Staff present: Aimee Irwin (Assistant to the Director), Matt Schuenke (Village Administrator), Tim Stieve (Town & Country Engineering)

2. PUBLIC APPEARANCES

   Kathy Pease located at 5705 West Open Meadow addressed the committee regarding her sump pump concerns located at the south side of the Elvehjem Road area near the bike trail.

3. APPROVAL OF MINUTES

   <u>Discussion and action regarding the minutes from the regular meeting held on October 15, 2019.</u>

   Eric Kryzenske clarified that verbiage should be verbage. Eric would also like the word “the” added between on and pump under the first bullet point on section 4c.

   Mary Pat Lytle clarified that Edward Wreh should be removed as absent as his resignation was provided.

   Motion by Pauline Boness to approve the minutes with edits suggested above. Seconded by Eric Kryzenske. Motion passed 4-0-0.

4. BUSINESS
   a. <u>Discussion regarding the PSC accepted increase for the water usage and base rates.</u>
      - Aimee stated that the PSC has accepted the simplified rate increase of 3%. The rates for November and December billing will be blended rates given that billing for those times will involve both the old rates and new rates. Each final bill customer will be calculated manually outside of the billing software as the software is unable to calculate this information to the day. Full rates will be in effect for January billing. Aimee provided the committee with the new rate chart given the November 13, 2019 rate increases along with November and December blended rate charts.

- No action was taken on this item.

b. Discussion and action regarding the Sanitary Sewer policy for utility customer billing disputes.
    - Mary Pat provided background information regarding this agenda item. Mary Pat stated that at the Public Utilities meeting in July committee members asked for the policy to include applicable ordinance language. Mary Pat had shared her concerns with committee members related to the ordinance at the July meeting. Attorney, Allen Reuter, provided his suggested edits to the policy. Committee members discussed if ordinance language should be included in the policy. Eric Kryzenske stated he would like to leave the ordinance in the policy and edit the ordinance. Committee members discussed the correction to the ordinance that should occur as to limit conflict between this policy and current ordinance language.
    - No action taking on this item.

5. SCHEDULE NEXT MEETING DATE
    a. Tuesday December 17, 2019 at 6:00 p.m.
6. ADJOURNMENT
    a. Motion by Pauline Boness to adjourn at 7:15 p.m. Seconded by Marc Neilsen. Motion passed 4-0-0.

VILLAGE OF
McFarland

# VILLAGE BOARD SUMMARY SHEET

**MEETING DATE:** **Tuesday, December 17, 2019**

**SECTION:** **Business**

**DEPARTMENT:** **Public Works**

**CONTACT:** **Jim Hessling, Public Works Director, Aimee Irwin, Assistant to the Public Works Director**

**AGENDA ITEM:** **Discussion and action to make a recommendation to the Village Board regarding the creation of a billing dispute policy and revisions to the billing dispute ordinance for sanitary sewer services.**

**PREVIOUS ACTION:**

**ISSUE SUMMARY:**
This item was initially introduced at the June 18, 2019 Public Utilities Committee meeting. This has been reviewed and edited at the July 16, August 20, Sept 17 and Nov 19 meetings. The Village Attorney (Al Reuter) has further reviewed the policy and ordinance after the November 19 meeting and made his suggested edits to both. Creating the policy and updating the ordinance will provide further clarity to the Public and Staff regarding how billing disputes are to be handled in conformance with our local codes and PSC standards.

**FINANCIAL/BUDGET IMPACT:**

**VILLAGE PLAN REFERENCE:**

**ORDINANCE REFERENCE:**

**BOARD, COMMISSION OR COMMITTEE RECOMMENDATION:**

**ATTACHMENTS:**
1. Section 47-148 - Appeal Procedures 12042019 mgs
2. Sanitary Sewer Billing Policy 12042019 mgs

Sec. 47-148. - Appeal procedures.

Any ~~user,~~customer affected by any decision, action, or determination, including cease and desist orders, made by the Utility in interpreting or implementing the provisions of this Article may file with the Village a written request for reconsideration within ten days of the date of such decision, action, or determination, setting forth in detail the facts supporting the user's request for reconsideration. ~~The Village upon receiving the request for reconsideration shall publish the request in the official newspaper.~~ The Public Utilities Committee shall render a decision on the request for reconsideration ~~of the user~~ in writing ~~within 15 days of receipt of request~~. If the ~~ruling on the request for reconsideration made by~~ customer is unsatisfied with the determination of the Public Utilities Committee ~~is unsatisfactory~~, the ~~person requesting reconsideration~~customer may, within ten days after notification of the action, file a written appeal with the Village Board. The provisions of this section are supplemental to, and are not intended to impair, any right of the customer to seek relief from the Public Service Commission of Wisconsin.

(Code 1998, § 9-2-7(i))

Effective Date xx/xx/xxxx
Utility Approvex xx/xx/xxxx
Village Board Approved xx/xx/xxxx

## SANITARY SEWER BILLING POLICY

### PURPOSE

This policy is intended to ensure that customers are billed consistently and appropriately for sewer service. The Public Service Commission (PSC) through the rules contained in Chapter 196 Wisconsin Statutes and Chapter 185 Wisconsin Administrative Code dictates billing of the water service. The PSC does not regulate the billing of sewer rates or usage; therefore, it is necessary to have a policy in place regarding sanitary sewer billing.

### DISCRIMINATION IN RATES

McFarland Utilities bills sewer usage based on the water usage associated with the customer's account. ~~Chapter~~ Section PSC185.15 of the ~~Public Service Commission~~Wisconsin Administrative Code, as well as ~~Chapters~~ sections 196.22 and 196.60 of Wisconsin Statutes prohibit free or discriminatory water service. The PSC's interpretation of these rules is that if the water goes through the meter and the meter tests accurately, the service must be billed. Section 66.0821 of the Wisconsin Statutes prohibits discriminatory and unreasonable rates for sewer systems. Therefore, it is the policy of McFarland Utilities ~~position based on these rules is~~ that the sewer usage must also be billed to the customer.

### STATEMENT OF POLICY

1. Pursuant to Section PSC185.34 of the ~~Public Service Commission~~Wisconsin Administrative Code, the McFarland Utilities will charge (back bill) for water ~~and wastewater~~ service for a period of two years when there is unrecorded remote outside meter (ROM) consumption. Sewer charges shall similarly be charged, based on the adjusted water service charges for the same period.
2. "Unrecorded ROM consumption" is defined as the base meter reading less ROM reading pursuant to the ~~PSC Administrative~~Wis. Admin. Code §PSC185.34(2).
3. Whenever the utility discovers unrecorded ROM consumption the utility will back bill prorated usage amounts for the previous 24 months in accordance with §196.635 of the Wisconsin ~~State~~ Statutes. ~~196.635.~~
4. If a customer requests a repayment agreement to pay a back bill for sewer service, the request will be treated as a deferred payment agreement in the same manner as a deferral of water service payments in accordance with ~~PSC~~ Wis. Admin.~~istrative~~ Code §PSC185.38
5. If the customer defaults on the repayment agreement the entire unpaid balance will become due and payable and will begin to accrue interest at a rate of 1% per

**Commented [ADR1]:** PSC 185.34 applies only to the water side. There are no regulations on the sewer side.

month in accordance with ~~the PSC~~Wis. Admin.~~istrative~~ Code §PSC185.33(10)(a).

6. During the repayment agreement period, the customer will need to remain current on any current usage of their utility account.
7. No further agreements will be extended if terms of the repayment agreement are not met.

**DISPUTE PROCEDURES**

The utility's obligation to the customer if a water utility charge is disputed is contained in Chapter PSC 185.39 Wis. Admin. Code. Those obligations stated briefly are: to investigate the concern promptly, advise the customer of the result of the investigation, attempt to resolve the dispute, and offer a deferred payment agreement if reasonable. The utility will adhere to Village ordinance sec. 47-148 regarding the appeal procedures in solving disputes along with procedures detailed here.

The ~~If the~~ customer~~'s~~ is free to file their concerns with the Utility in order to reach a resolution but is free at any time to file their concern as a complaint with the PSC. ~~is not resolved by the utility, the customer may contact the PSC to file an appeal.~~ ~~Chapter~~ Section 66.0821(5)(a) Wis. Stats states that "if a user of sewer service complains to the public service commission that rates, rules and practices are unreasonable or unjustly discriminatory….the public service commission shall investigate the complaint".

VILLAGE OF
McFarland

# VILLAGE BOARD SUMMARY SHEET

**MEETING DATE:** **Tuesday, December 17, 2019**

**SECTION:** **Business**

**DEPARTMENT:** **Public Works**

**CONTACT:** **Jim Hessling, Public Works Director**

**AGENDA ITEM:** **Update on the sewer rate study.**

**PREVIOUS ACTION:**

**ISSUE SUMMARY:**
From Brian Berquist of Town & Country Engineering 12/12/19

The auditors on-site were able to provide almost all of the remaining information about the Sewer Utility financials. We have a few follow-up questions for them, but we have enough information to bring a table showing our assumptions/projections for the Utility. Those assumptions relate to how historical sewer flows relate to projected future flows, how many new users are projected each year, and whether some funds should be allocated for Capital projects (like Lift Station #2) in future years.

**FINANCIAL/BUDGET IMPACT:**

**VILLAGE PLAN REFERENCE:**

**ORDINANCE REFERENCE:**

**BOARD, COMMISSION OR COMMITTEE RECOMMENDATION:**

**ATTACHMENTS:**
None

VILLAGE OF
McFarland

# VILLAGE BOARD SUMMARY SHEET

**MEETING DATE:** **Tuesday, December 17, 2019**

**SECTION:** **Business**

**DEPARTMENT:** **Public Works**

**CONTACT:** **Matt Schuenke, Village Administrator, Jim Hessling, Public Works Director**

**AGENDA ITEM:** **Discussion and action to make a recommendation to the Village Board on purchasing "No Fault Sewer" extended coverage through the League of Wisconsin Municipalities Mutual Insurance Carrier.**

**PREVIOUS ACTION:**

**ISSUE SUMMARY:**

As we consider our rate structure within the Sanitary Sewer, Staff wants to raise the possibility of adding no-fault sanitary sewer backup coverage that our insurance carrier can provide. This policy would provide coverage to our Customers on a per occurrence basis when they experience a backup after the homeowners insurance has been paid out. There is no finding of fault, just simply a means and method to help protect homes hooked up to the system. We have in the past considered this but not elected this coverage. Given that we are planning to increase rates in order to account for our current and ongoing expenditures we would like to strongly recommend including this with our ongoing protections.

We have seen a rise in sanitary sewer backups some of which have led to claims against the Village. There were 2 known backups in 2017, 1 known backup in 2018, and 3 known backups in 2019. Three of those have lead to claims against the Village, two were private property issues, and one was the result of negligence by our contractor. While there is immunity for such things, there are still expenses to administer the claims and defend the Village. Electing this coverage will go a long way to help providing coverage to our Customers and protecting against future loses for what we consider a nominal cost.

The cost for this service is quoted at $14,922 per year and will also coverage losses as a result of backups created by the water utility. We can evaluate splitting the coverage between both rate structures.

Village Staff recommends accepting this quote and enacting this coverage immediately.

**FINANCIAL/BUDGET IMPACT:**

VILLAGE OF
McFarland

**VILLAGE PLAN REFERENCE:**

**ORDINANCE REFERENCE:**

**BOARD, COMMISSION OR COMMITTEE RECOMMENDATION:**

**ATTACHMENTS:**

1. No Fault Sewer Coverage Description
2. Cassandra e-mail for Dec 2019

## Coverage Description- League "No Fault Sewer" Extended coverage

**All General Liability policies cover you for your "legal liability" and because state statutes say you are responsible to reasonably inspect and maintain sewer lines loss or damage from back ups from your main lines into resident homes or businesses are covered by General Liability policies when you physically cause a back up (ie when trying to clear a blockage or back flushing) or if you never inspect or perform any maintenance on your lines.**

**So what about those other instances where a disposable diaper, grease plug, or tree roots etc cause back ups originating from your main line where you have been doing inspections and weren't performing any physical action on the line? By statute neither you nor your insurance carrier are obligated for damage these blockages cause which often times leaves the affected property owner less than happy.**

**The League developed a coverage endorsement "No Fault Sewer" to address such losses. The affected property owner is required to go to his or her insurance carrier as the primary source of coverage but the League "No Fault" coverage will cover the property owners "out of pocket" expenses not covered by the primary insurance up to $100,000 in a single claim ($300,000 maximum for all claims in a policy year.) In effect you are buying coverage for your residents and in the process are relieved from having to explain why your main line back up into the property owners premises and the associated damage and clean up are not your responsibility.**

**Not every municipality purchases this protection but around 85% of League participants do. Since the coverage cost can be budgeted to the sewer utility it can ultimately be a pass through in the water utility rates and coverage this way is far cheaper than property owners can buy on their own**

**From:** Cassandra Suettinger <Cassandra.Suettinger@mcfarland.wi.us>
**Sent:** Tuesday, December 03, 2019 3:23 PM
**To:** Jim Hessling <Jim.Hessling@mcfarland.wi.us>; Matt Schuenke <Matt.Schuenke@mcfarland.wi.us>
**Subject:** FW: No fault Sewer Insurance

Per your request.

Cassandra

**From:** Mike Zagrodnik <MikeZ@baerinsurance.com>
**Sent:** Tuesday, December 3, 2019 3:22 PM
**To:** Cassandra Suettinger <Cassandra.Suettinger@mcfarland.wi.us>
**Subject:** RE: No fault Sewer Insurance

At population of 8527 premium will be $14,922 for a year. If you are looking at any water rate adjustments you can figure out per user what the annual cost of this amounts to per each one ie 5000 billings per cycle amounts to $3 a year each that could be passed in in your rates since the insurance is for them not because you have any statutory liability for backups. Coverage is for sewer and water backups – A coverage description is attached for you

**Mike Zagrodnik**, CPCU | Municipalities Account Executive
Baer Insurance Services | P. 608.830.5803 | F. 608.830.5877
Website | Facebook | Twitter | Review us on Google!

This message and its contents are confidential. If you received this message in error, do not use or rely upon it. Instead, please inform the sender and then delete it. Thank you.

**From:** Cassandra Suettinger [mailto:Cassandra.Suettinger@mcfarland.wi.us]
**Sent:** Tuesday, December 3, 2019 3:14 PM
**To:** Mike Zagrodnik <MikeZ@baerinsurance.com>
**Subject:** No fault Sewer Insurance

Mike,

Can you get me a quote on how much it would cost us to pick up no fault sewer insurance?

Thanks

Cassandra Suettinger, WCMC

VILLAGE OF
McFarland

# VILLAGE BOARD SUMMARY SHEET

**MEETING DATE:** **Tuesday, December 17, 2019**

**SECTION:** **Business**

**DEPARTMENT:** **Public Works**

**CONTACT:** **Jim Hessling, Public Works Director**

**AGENDA ITEM:** **Discussion on drainage improvements adjacent to the Lower Yahara Trail generally located on Elvehjem Road near Hidden Farm Road.**

**PREVIOUS ACTION:**
This item has been discussed, in general, at previous meetings, most recently the joint Public Utilities and Public Works Committee of November 19, 2019. At that meeting the plan was discussed and changes were recommended.

**ISSUE SUMMARY:**
The review of plans for drainage improvements along the north side of Elvehjem Road.

Drainage improvements to the area will help improve the flow of water from rear yards, sump pumps and the street.

**FINANCIAL/BUDGET IMPACT:**

**VILLAGE PLAN REFERENCE:**

**ORDINANCE REFERENCE:**

**BOARD, COMMISSION OR COMMITTEE RECOMMENDATION:**

**ATTACHMENTS:**
1. MC 160 CURRENT SET

# 2020 STREET AND UTILITY IMPROVEMENTS

## CREAMERY ROAD AND ELVEHJEM ROAD

### Village of McFarland, Wisconsin

## SHEET INDEX


| SHEET NO. | SHEET DESCRIPTION |
|---|---|
| 1 | EROSION CONTROL PLAN AND GENERAL NOTES |
| 2 | EROSION CONTROL – STANDARD CONSTRUCTION DETAILS |
| SANITARY SEWER, WATER MAIN, AND STORM SEWER | |
| A1 | PLAN & PROFILE – CREAMERY ROAD STATION 9+00 TO STATION 15+00 |
| A2 | PLAN & PROFILE – ELVEHJEM ROAD STATION 14+60 TO STATION 20+60 |
| A3 | PLAN & PROFILE – ELVEHJEM ROAD STATION 20+20 TO STATION 26+20 |
| A4 | STORM SEWER – STANDARD CONSTRUCTION DETAILS |
| CURB & GUTTER AND STREET CONSTRUCTION | |
| A5 | STREET IMPROVEMENTS – STANDARD CONSTRUCTION DETAILS |
| X1 | CROSS SECTIONS – CREAMERY ROAD STATION 10+50 TO STATION 14+50 |
| X2 | CROSS SECTIONS – ELVEHJEM ROAD STATION 15+00 TO STATION 20+00 |
| X3 | CROSS SECTIONS – ELVEHJEM ROAD STATION 20+50 TO STATION 23+95 |

NO SCALE

MEMBER
ONE CALL SYSTEMS INTERNATIONAL

TO OBTAIN LOCATION OF PARTICIPANTS' UNDERGROUND FACILITIES BEFORE YOU DIG IN WISCONSIN

CALL DIGGERS HOTLINE
1–800–242–8511
TOLL FREE

WIS. STATUTE 182.0175 (1974) REQUIRES MIN. OF 3 WORK DAYS NOTICE BEFORE YOU EXCAVATE.

## LEGEND

UNDERGROUND TELE. — UT
UNDERGROUND CATV. — UCATV
UNDERGROUND ELEC. — UE
OVERHEAD — OH
EXISTING GAS — G
PROPERTY LINE
EXISTING WATER MAIN — WM
EXISTING SANITARY SEWER — SAN
EXISTING STORM SEWER — STM
EXISTING FENCE LINE
SAWCUT
NEW STORM SEWER
NEW WATER MAIN
NEW SANITARY SEWER

NEW ITEMS: WATER VALVE, CURB STOP, HYDRANT, MANHOLE, CURB INLET, ENDWALL, GAS WARNING

EXISTING ITEMS: FLAG POLE, MAILBOX, POWER POLE, LIGHT POLE, LAMP POST, PULL BOX, WATER VALVE, CURB STOP, HYDRANT, WELL, MONITORING WELL, TRACER WIRE, SANITARY MANHOLE, SANITARY VALVE, CLEANOUT, STORM MANHOLE, CURB INLET, CIRCULAR INLET, SQUARE INLET, ENDWALL, STUMP, DECID. TREE (RELATIVE SIZE SHOWN), EVERGREEN, SHRUB OR HEDGE, SIGN, CATV. PED., TELE. PED., ELEC. PED., GAS VALVE, STREET SIGN, IRON PIPE, IRON ROD

NOTES: 1.) EXISTING FEATURES AND LABELS ARE SHOWN WITH SCREENED, LIGHTER LINES.
2.) NEW CONCRETE IS SHOWN SHADED IN PLAN VIEWS
3.) CONCRETE REMOVALS ARE SHOWN BY CROSS–HATCHING


TOWN & COUNTRY ENGINEERING, INC.
2912 Marketplace Drive
Suite 103
Madison, WI 53719
(608) 273-3350
www.tcengineers.net


| SHEET | REVISIONS | BY | DATE |
|---|---|---|---|

2020 STREET AND UTILITY IMPROVEMENTS
CREAMERY ROAD AND ELVEHJEM ROAD
Village of McFarland, Wisconsin

DRAWN BY: J.R.K.
CHECKED BY: B.R.B.
REV. DATE:
PROJECT NO.: MC 160
DRAWING FILE: MC 160 DETAILS.DWG
DATE: 10–29–19

PRELIMINARY

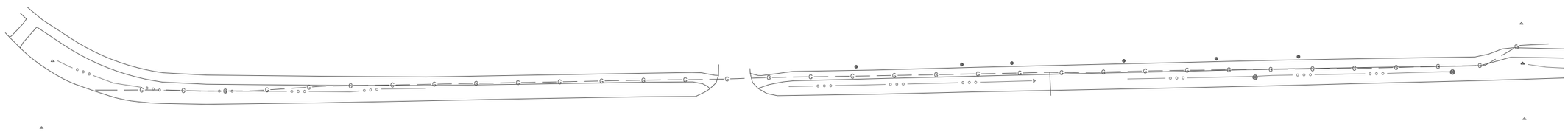

N

## EROSION CONTROL NOTES:

- LOCATIONS MARKED WITH "■" TO RECEIVE INLET FILTER PROTECTION DURING CONSTRUCTION. ALL NEW STREET INLETS MUST ALSO RECEIVE INLET FILTER PROTECTION.
- CONSTRUCT A STONE CHECK DAM IN GUTTER LINE AT ALL LOCATIONS MARKED WITH "▲"
- SURFACE FLOW DIRECTION IS INDICATED WITH
- SILT FENCE INSTALLATION IS INDICATED WITH
- POST WDNR CERTIFICATE OF PERMIT COVERAGE ON SITE AND MAINTAIN UNTIL CONSTRUCTION ACTIVITIES HAVE CEASED, THE SITE IS STABILIZED, AND A NOTICE OF TERMINATION IS FILED WITH WDNR.
- KEEP A COPY OF THE CURRENT EROSION CONTROL PLAN ON SITE THROUGHOUT THE DURATION OF THE PROJECT.
- SUBMIT PLAN REVISIONS OR AMENDMENTS TO THE WDNR AT LEAST 5 DAYS PRIOR TO FIELD IMPLEMENTATION.
- THE CONTRACTOR IS RESPONSIBLE FOR ROUTINE SITE INSPECTIONS AT LEAST ONCE EVERY 7 DAYS AND WITHIN 24 HOURS AFTER A RAINFALL EVENT OF 0.5 INCHES OR GREATER. KEEP INSPECTION REPORTS ON-SITE AND MAKE THEM AVAILABLE UPON REQUEST.
- INSPECT AND MAINTAIN ALL INSTALLED EROSION CONTROL PRACTICES UNTIL THE CONTRIBUTING DRAINAGE AREA HAS BEEN STABILIZED.
- WHEN POSSIBLE: PRESERVE EXISTING VEGETATION (ESPECIALLY ADJACENT TO SURFACE WATERS), MINIMIZE LAND-DISTURBING CONSTRUCTION ACTIVITY ON SLOPES OF 20% OR MORE, MINIMIZE SOIL COMPACTION, AND PRESERVE TOPSOIL.
- REFER TO THE WDNR STORMWATER CONSTRUCTION TECHNICAL STANDARDS AT http:dnr.wi.gov/topic/stormwater/standards/const_standards.html.
- INSTALL PERIMETER EROSION CONTROLS AND ROCK TRACKING PAD CONSTRUCTION ENTRANCE(S) PRIOR TO ANY LAND-DISTURBING ACTIVITIES, INCLUDING CLEARING AND GRUBBING. USE WDNR TECHNICAL STANDARD STONE TRACKING PAD AND TIRE WASHING #1057 FOR ROCK CONSTRUCTION ENTRANCE(S).
- INSTALL INLET PROTECTION PRIOR TO LAND-DISTURBING ACTIVITIES IN THE CONTRIBUTING DRAINAGE AREA AND/OR IMMEDIATELY UPON INLET INSTALLATION. COMPLY WITH WDNR TECHNICAL STANDARD STORM DRAIN INLET PROTECTION FOR CONSTRUCTION SITES #1060.
- STAGE CONSTRUCTION GRADING ACTIVITIES TO MINIMIZE THE CUMULATIVE EXPOSED AREA. CONDUCT TEMPORARY GRADING FOR EROSION CONTROL PER WDNR TECHNICAL STANDARD TEMPORARY GRADING PRACTICES FOR EROSION CONTROL #1067.
- NOTIFY THE OWNER IF DEWATERING IS SCHEDULED TO OCCUR IN AREAS OF SOIL AND/OR GROUNDWATER CONTAMINATION, OR IF DEWATERING WILL OCCUR FROM A HIGH CAPACITY WELL (70 GPM OR MORE). DEWATER ONLY AFTER THE APPROPRIATE WDNR DEWATERING DISCHARGE PERMIT HAS BEEN OBTAINED.
- PROVIDE ANTI-SCOUR PROTECTION AND MAINTAIN NON-EROSIVE FLOW DURING DEWATERING. LIMIT PUMPING RATES TO EITHER (A) THE SEDIMENT BASIN/TRAP DESIGN DISCHARGE RATE, OR (B) THE BASIN DESIGN RELEASE RATE WITH THE CORRECTLY-FITTED HOSE AND GEOTEXTILE FILTER BAG. PERFORM DEWATERING OF ACCUMULATED SURFACE RUNOFF IN ACCORDANCE WITH WDNR TECHNICAL STANDARD DE-WATERING #1061.
- COMPLETE AND STABILIZE SEDIMENT BASINS/TRAPS OR WET PONDS PRIOR TO MASS LAND DISTURBANCE TO CONTROL RUNOFF DURING CONSTRUCTION. REMOVE SEDIMENT AS NEEDED TO MAINTAIN 3 FEET OF DEPTH TO THE OUTLET, AND PROPERLY DISPOSE OF SEDIMENT REMOVED DURING MAINTENANCE (REFER TO NR 528). CONSTRUCT AND MAINTAIN THE SEDIMENT BASIN PER WDNR TECHNICAL STANDARD SEDIMENT BASIN #1064 AND SEDIMENT TRAP #1063.
- CONSTRUCT AND PROTECT THE BIOINFILTRATION BASIN AND VEGETATION FROM RUNOFF AND SEDIMENT DURING CONSTRUCTION. REFERENCE THE WDNR TECHNICAL STANDARD BIORETENTION FOR INFILTRATION #1004.
- INSTALL AND MAINTAIN SILT FENCING PER WDNR TECHNICAL STANDARD SILT FENCE #1056. REMOVE SEDIMENT FROM BEHIND SILT FENCES AND SEDIMENT BARRIERS BEFORE SEDIMENT REACHES A DEPTH THAT IS EQUAL TO ONE-HALF OF THE FENCE AND/OR BARRIER HEIGHT.
- REPAIR BREAKS AND GAPS IN SILT FENCES AND BARRIERS IMMEDIATELY. REPLACE DECOMPOSING STRAW BALES (TYPICAL BALE LIFE IS 3 MONTHS). LOCATE, INSTALL, AND MAINTAIN STRAW BALES PER WDNR TECHNICAL STANDARD DITCH CHECKS #1062.
- INSTALL AND MAINTAIN FILTER SOCKS IN ACCORDANCE WITH WDNR TECHNICAL STANDARD INTERIM MANUFACTURED PERIMETER CONTROL AND SLOPE INTERRUPTION PRODUCTS #1071.
- IMMEDIATELY STABILIZE STOCKPILES AND SURROUND STOCKPILES AS NEEDED WITH SILT FENCE OR OTHER PERIMETER CONTROL IF STOCKPILES WILL REMAIN INACTIVE FOR 7 DAYS OR LONGER.
- IMMEDIATELY STABILIZE ALL DISTURBED AREAS THAT WILL REMAIN INACTIVE FOR 14 DAYS OR LONGER. BETWEEN SEPTEMBER 15 AND OCTOBER 15: STABILIZE WITH MULCH, TACKIFIER, AND A PERENNIAL SEED MIXED WITH WINTER WHEAT, ANNUAL OATS, OR ANNUAL RYE, AS APPROPRIATE FOR REGION AND SOIL TYPE. OCTOBER 15 THROUGH COLD WEATHER: STABILIZE WITH A POLYMER AND DORMANT SEED MIX, AS APPROPRIATE FOR REGION AND SOIL TYPE.
- STABILIZE AREAS OF FINAL GRADING WITHIN 7 DAYS OF REACHING FINAL GRADE.
- SWEEP/CLEAN UP ALL SEDIMENT/TRASH THAT MOVES OFF-SITE DUE TO CONSTRUCTION ACTIVITY OR STORM EVENTS BEFORE THE END OF THE SAME WORKDAY OR AS DIRECTED BY THE OWNER. SEPARATE SWEPT MATERIALS (SOILS AND TRASH) AND DISPOSE OF APPROPRIATELY.
- THE CONTRACTOR IS RESPONSIBLE FOR CONTROLLING DUST PER WDNR TECHNICAL STANDARD DUST CONTROL ON CONSTRUCTION SITES #1068.
- PROPERLY DISPOSE OF ALL WASTE AND UNUSED BUILDING MATERIALS (INCLUDING GARBAGE, DEBRIS, CLEANING WASTES, OR OTHER CONSTRUCTION MATERIALS) AND DO NOT ALLOW THESE MATERIALS TO BE CARRIED BY RUNOFF INTO THE RECEIVING CHANNEL.
- COORDINATE WITH THE OWNER TO UPDATE THE LAND DISTURBANCE PERMIT TO INDICATE THE ANTICIPATED OR LIKELY DISPOSAL LOCATIONS FOR ANY EXCAVATED SOILS OR CONSTRUCTION DEBRIS THAT WILL BE HAULED OFF-SITE FOR DISPOSAL. THE DEPOSITED OR STOCKPILED MATERIAL NEEDS TO INCLUDE PERIMETER SEDIMENT CONTROL MEASURES (SUCH AS SILT FENCE, HAY BALES, FILTER SOCKS, OR COMPACTED EARTHEN BERMS).
- FOR NON-CHANNELIZED FLOW ON DISTURBED OR CONSTRUCTED SLOPES, PROVIDE CLASS I, II OR III TYPE A EROSION CONTROL MATTING. SELECT EROSION MATTING FROM APPROPRIATE MATRIX IN WDOT'S WIDOT PRODUCT ACCEPTABILITY LIST (PAL); INSTALL AND MAINTAIN PER WDNR TECHNICAL STANDARD NON-CHANNEL EROSION MAT #1052.
- FOR CHANNELIZED FLOW ON DISTURBED OR CONSTRUCTED AREAS, PROVIDE CLASS I, II, OR III TYPE B EROSION CONTROL MATTING. SELECT EROSION MATTING FROM APPROPRIATE MATRIX IN WDOT'S WIDOT PRODUCT ACCEPTABILITY LIST (PAL); INSTALL AND MAINTAIN PER WDNR TECHNICAL STANDARD CHANNEL EROSION MAT #1053.
- MAKE PROVISIONS FOR WATERING DURING THE FIRST 8 WEEKS FOLLOWING SEEDING OR PLANTING OF DISTURBED AREAS WHENEVER MORE THAN 7 CONSECUTIVE DAYS OF DRY WEATHER OCCUR.
- INSTALL ADDITIONAL EROSION AND SEDIMENT CONTROL MEASURES (SUCH AS TEMPORARY SEDIMENT BASINS, DITCH CHECKS, EROSION CONTROL MATTING, SILT FENCING, FILTER SOCKS, WATTLES, SWALES, ETC.), OR AS DIRECTED BY THE OWNER.
- THE CONTRACTOR IS RESPONSIBLE FOR COMPLYING WITH ALL APPLICABLE WDNR REMEDIATION AND WASTE MANAGEMENT REQUIREMENTS FOR HANDLING AND DISPOSING OF CONTAMINATED MATERIALS. SITE-SPECIFIC INFORMATION FOR AREAS WITH KNOWN OR SUSPECTED SOIL AND/OR GROUNDWATER CONTAMINATION CAN BE FOUND ON WDNR'S BUREAU OF REMEDIATION AND REDEVELOPMENT TRACKING SYSTEM (BRRTS) PUBLIC DATABASE AT: http://dnr.wi.gov/botw/
- REFER TO THE [INSERT TITLE OF SPILL PLAN DOCUMENT] IF THERE IS A DISCHARGE OF SEDIMENT AND/OR OTHER CONTAMINANTS. A SPILL PLAN IS REQUIRED IF THERE IS POTENTIAL TO DISCHARGE CONTAMINANTS TO WATERS OF THE STATE.
- REFER TO THE [INSERT TITLE OF SPILL PLAN DOCUMENT] IF AN INADVERTENT DISCHARGE OF DRILLING FLUIDS ("FRAC OUT") OCCURS. A SPILL PLAN IS REQUIRED IF THERE IS POTENTIAL TO DISCHARGE CONTAMINANTS TO WATERS OF THE STATE.


TOWN & COUNTRY ENGINEERING, INC.
2912 Marketplace Drive
Suite 103
Madison, WI 53719
(608) 273-3350
www.tcengineers.net


EROSION CONTROL PLAN AND GENERAL NOTES

2020 STREET AND UTILITY IMPROVEMENTS
CREAMERY RD AND ELVEHJEM RD
Village of McFarland, Wisconsin

| | |
|---|---|
| PROJECT NO.: | MC 160 |
| DRAWING NO.: | MC 160-SHEETS.DWG |
| DRAWN BY: | J.R.K. |
| CHECKED BY: | B.R.B. |
| DATE: | 10-29-19 |
| REVISIONS: | |
| SCALE: | 0 25 50 |
| SHEET: | 1 |

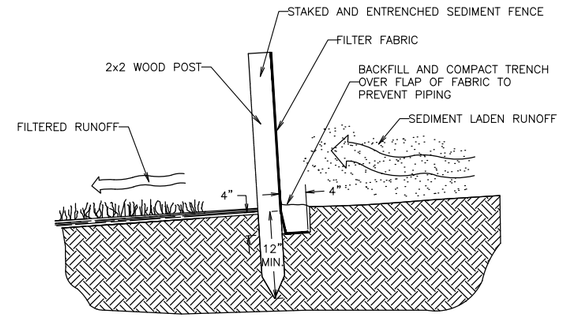


CROSS–SECTION OF A PROPERLY INSTALLED SEDIMENT FENCE

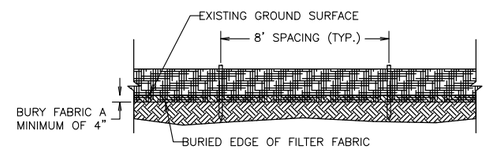


SEDIMENT FENCE DETAIL

DETAIL
SEDIMENT FENCE

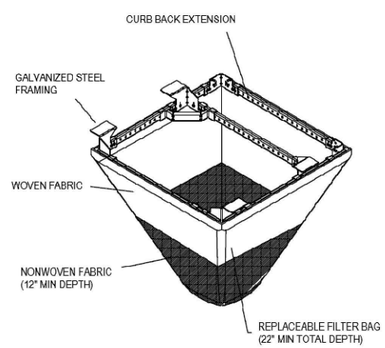


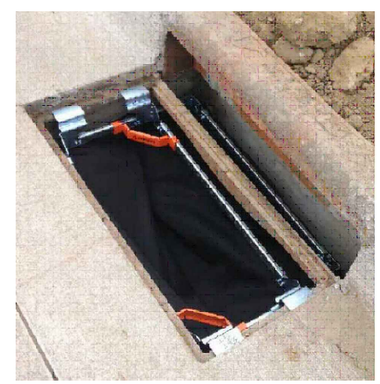

GENERAL NOTES:

WHEN REMOVING OR MAINTAINING INLET PROTECTION, CARE SHALL BE TAKEN SO THAT THE SEDIMENT TRAPPED IN THE GEOTEXTILE FABRIC DOES NOT FALL INTO THE INLET. ANY MATERIAL FALLING INTO THE INLET SHALL BE REMOVED IMMEDIATELY.

FRAMED INLET PROTECTION SHALL BE COMPLIANT WITH ALL ASTM STANDARD D8057–17 REQUIREMENTS, INCLUDING:

A. BYPASS OVERFLOW THAT MEETS OR EXCEEDS INLET DESIGN FLOW
B. FRAME AND BAG STRONG ENOUGH TO HANDLE FULL SEDIMENT LOAD.

INSTALLATION NOTES:

NO PART OF INLET PROTECTION SHALL BE PROJECTING ABOVE THE GRATE.

FOR COMBINATION INLETS, PROTECTION SHALL CAPTURE RUNOFF ENTERING BOTH GRATE AND CURB OPENING.

A DUAL FABRIC FILTER BAG, WITH NON–WOVEN BOTTOM AND WOVEN TOP SHALL BE USED.

THE INSTALLED BAG SHALL HAVE A MINIMUM SIDE CLEARANCE, BETWEEN THE INLET WALLS AND THE BAG, MEASURED AT THE BOTTOM OF THE OVERFLOW HOLES, OF 3". WHERE NECESSARY THE CONTRACTOR SHALL CINCH THE BAG, USING PLASTIC ZIP TIES, TO ACHIEVE THE 3" CLEARANCE. THE TIES SHALL BE PLACED AT A MAXIMUM OF 4" FROM THE BOTTOM OF THE BAG.

DETAIL
INLET PROTECTION - FRAMED (W/ CURB BOX)

PRELIMINARY

TOWN & COUNTRY ENGINEERING, INC.
2912 Marketplace Drive
Suite 103
Madison, WI 53719
(608) 273-3350
www.tcengineers.net

STANDARD CONSTRUCTION DETAILS
EROSION CONTROL

20XX STREET AND UTILITY IMPROVEMENTS
Street Name, Street Name, Street Name
Village of McFarland, Wisconsin

| | |
|---|---|
| PROJECT NO.: | ## ## |
| DRAWING FILE: | MC 160 DETAILS.DWG |
| DRAWN BY: | X.X.X. |
| CHECKED BY: | X.X.X. |
| DATE: | X–X–XX |
| REVISIONS: | |
| SCALE: | N.T.S. |
| SHEET: | 2 |

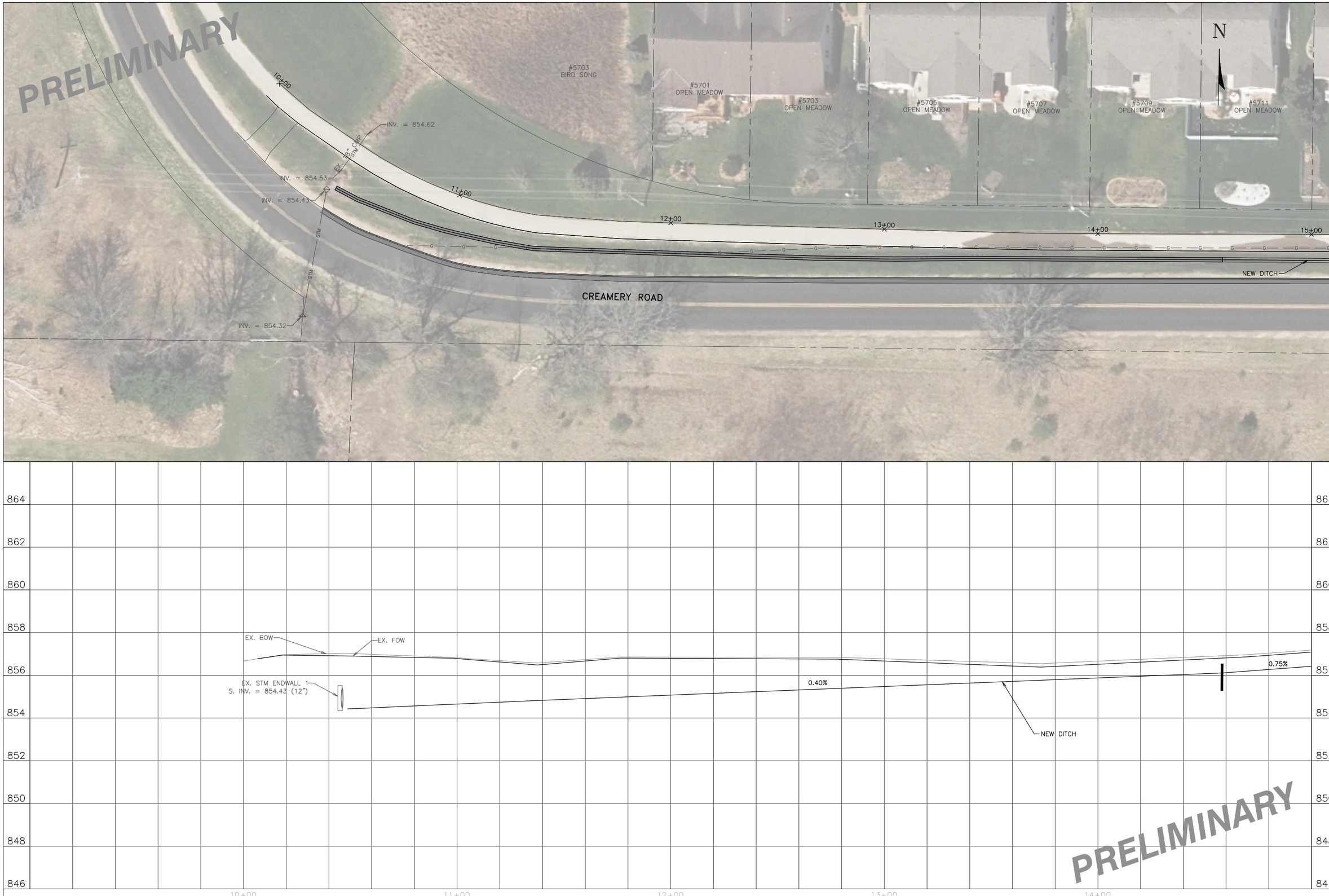



TOWN & COUNTRY ENGINEERING, INC.
2912 Marketplace Drive
Suite 103
Madison, WI 53719
(608) 273-3350
www.tcengineers.net


PLAN & PROFILE
CREAMERY ROAD
Station 9+00 To Station 15+00

2020 STREET AND UTILITY IMPROVEMENTS
CREAMERY RD AND ELVEHJEM RD
Village of McFarland, Wisconsin

| | |
|---|---|
| PROJECT NO.: | MC 160 |
| DRAWING FILE: | MC 160 SHEETS.DWG |
| DRAWN BY: | J.R.K. |
| CHECKED BY: | B.R.B. |
| DATE: | 10-29-19 |
| REVISIONS: | |
| SCALE: HORIZONTAL | 0 5 10 20 |
| VERTICAL | 1 2 |
| SHEET: | A1 |

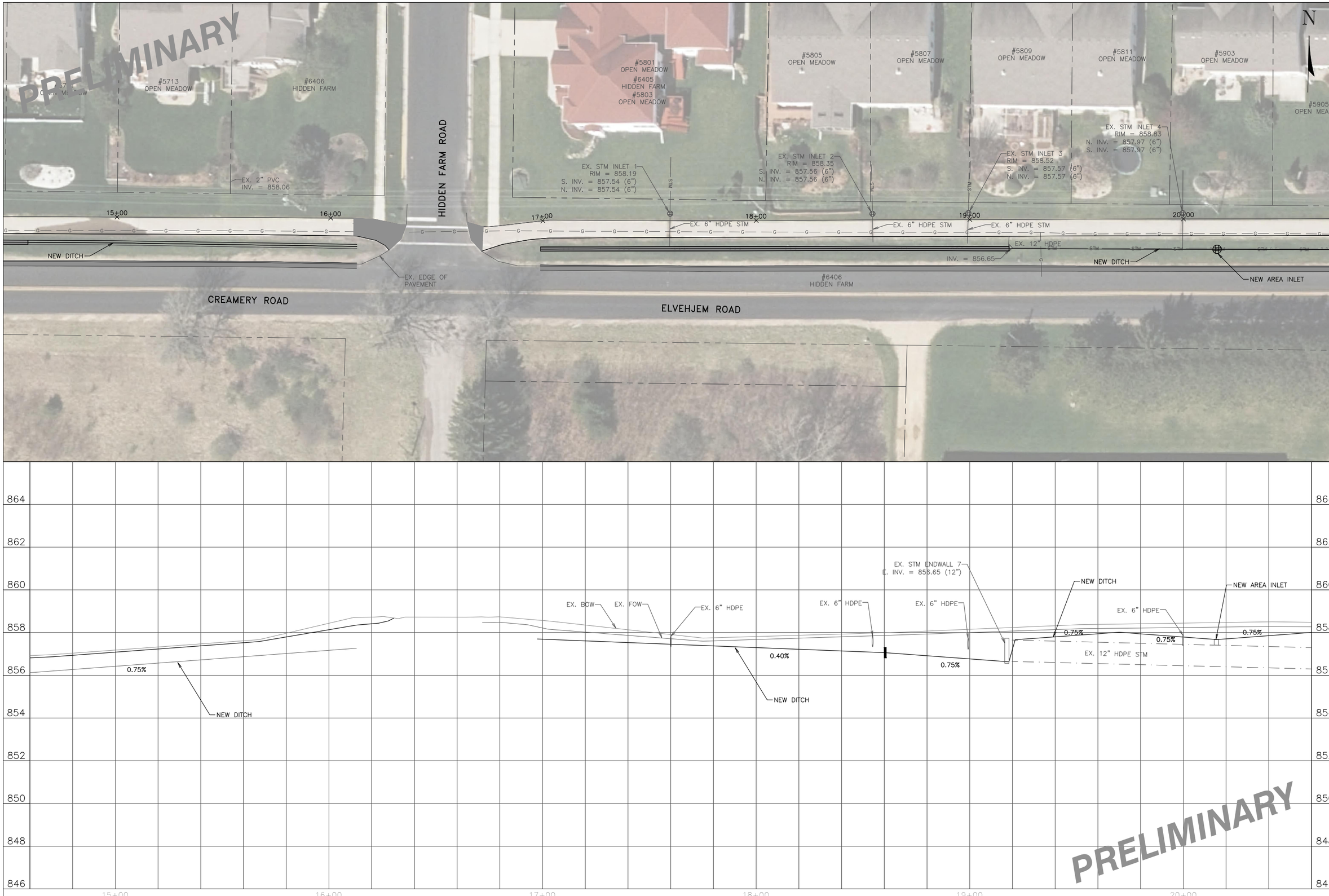



2912 Marketplace Drive
Suite 103
Madison, WI 53719
(608) 273-3350
www.tcengineers.net
TOWN & COUNTRY ENGINEERING, INC.


PLAN & PROFILE
ELVEJHEM ROAD
Station 14+60 To Station 20+60

2020 STREET AND UTILITY IMPROVEMENTS
CREAMERY RD AND ELVEHJEM RD
Village of McFarland, Wisconsin

| | |
|---|---|
| PROJECT NO.: | MC 160 |
| DRAWING FILE: | MC 160 SHEETS.DWG |
| DRAWN BY: | J.R.K. |
| CHECKED BY: | B.R.B. |
| DATE: | 10-29-19 |
| REVISIONS: | |
| SCALE: HORIZONTAL | 0 5 10 20 |
| VERTICAL | 1 2 |
| SHEET: | A2 |

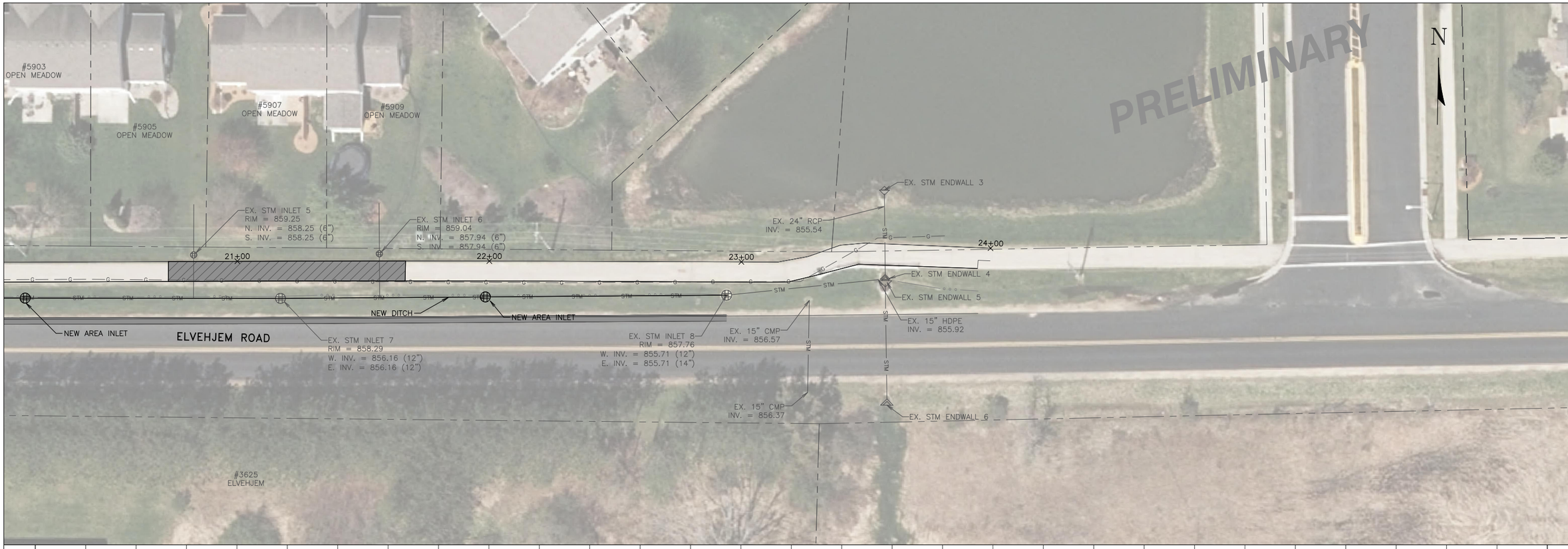


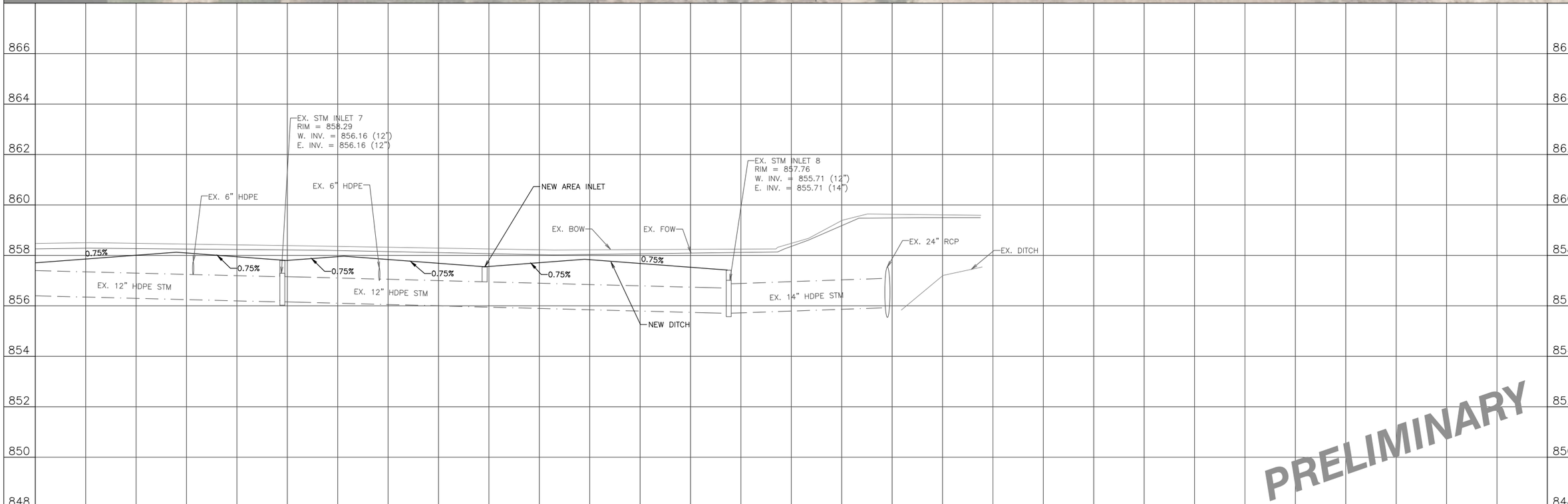



TOWN & COUNTRY ENGINEERING, INC.
2912 Marketplace Drive
Suite 103
Madison, WI 53719
(608) 273-3350
www.tcengineers.net


PLAN & PROFILE
ELVEHJEM ROAD
Station 20+20 To Station 26+20

2020 STREET AND UTILITY IMPROVEMENTS
CREAMERY RD AND ELVEHJEM RD
Village of McFarland, Wisconsin

| | |
|---|---|
| PROJECT NO.: | MC 160 |
| DRAWING FILE: | MC 160 SHEETS.DWG |
| DRAWN BY: | J.R.K. |
| CHECKED BY: | B.R.B. |
| DATE: | 10-29-19 |
| REVISIONS: | |
| SCALE: HORIZONTAL | 0 5 10 20 |
| VERTICAL | 1 2 |
| SHEET: | A3 |

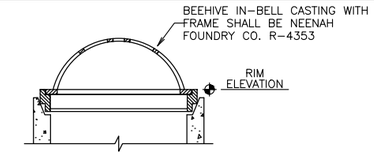


AREA INLET WITH BEEHIVE CASTING

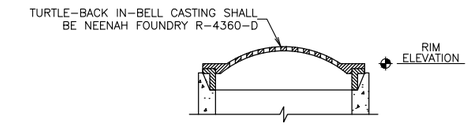


AREA INLET WITH TURTLE-BACK CASTING

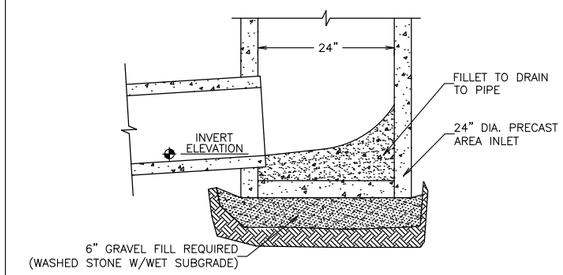


AREA INLET BOTTOM SECTION

DETAIL
AREA INLET

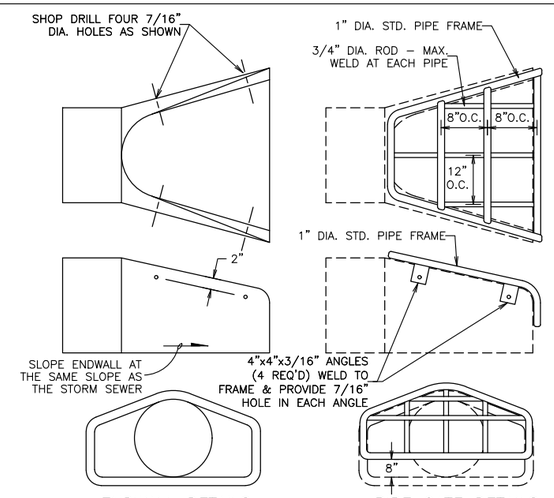


ENDWALL DETAILS PIPE GATE DETAILS

NOTES:
– THE CONTRACTOR SHALL BOLT THE PIPE GATE TO THE CONCRETE ENDWALL WITH FOUR 3/8"x6" MACHINE BOLTS WITH NUTS ON INSIDE WALL.

PAINTING SPECIFICATIONS:
– THE PIPE GATE SHALL RECEIVER THE FOLLOWING PREPARATION & PAINTING. THE FIRST COAT SHALL BE RUS-OLEUM X-60 RED BARE METAL PRIMER OR APPROVED EQUAL. THE SECOND COAT SHALL BE RUST-OLEUM 960 ZINC CHROMATE PRIMER OR APPROVED EQUAL. THE THIRD COAT SHALL BE RUS-OLEUM 1282 HIGH GLOSS METAL FINISH OR APPROVED EQUAL.

PREPARATION STEPS:
1. BARE METAL SURFACES – TREAT WITH THE THREE-COAT PAINTING SYSTEM LISTED AFTER A THOROUGH SCRAPING, WIRE BRUSHING & CLEANING.
2. EACH COAT OF PAINT SHALL BE APPLIED OVER THE ENTIRE GATE SURFACE.
3. ALLOW 24-48 HOURS DRYING TIME AT 60° OR ABOVE BETWEEN COATS.

DETAIL
ENDWALLS

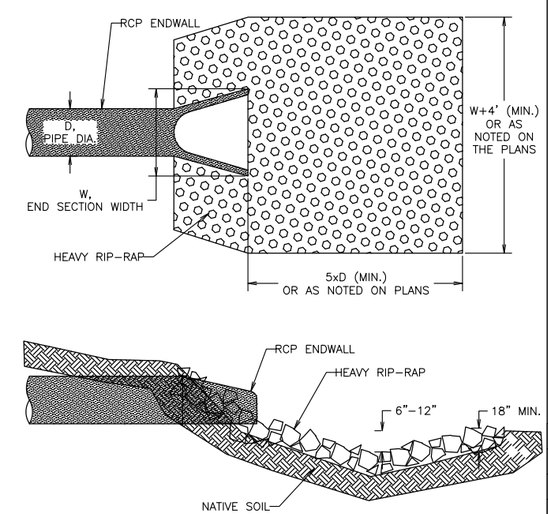


NOTE:

RIP-RAP SHALL BE A MINIMUM OF 2 C.Y. PER ENDWALL.

PRELIMINARY

DETAIL
ENDWALL RIP-RAP

TOWN & COUNTRY ENGINEERING, INC.
2912 Marketplace Drive
Suite 103
Madison, WI 53719
(608) 273-3350
www.tcengineers.net

STANDARD CONSTRUCTION DETAILS
STORM SEWER

20XX STREET AND UTILITY IMPROVEMENTS
Street Name, Street Name, Street Name
Village of McFarland, Wisconsin

| | |
|---|---|
| PROJECT NO.: | ## ## |
| DRAWING FILE: | MC 160 DETAILS.DWG |
| DRAWN BY: | X.X.X. |
| CHECKED BY: | X.X.X. |
| DATE: | X-X-XX |
| REVISIONS: | |
| SCALE: | N.T.S. |
| SHEET: | A4 |

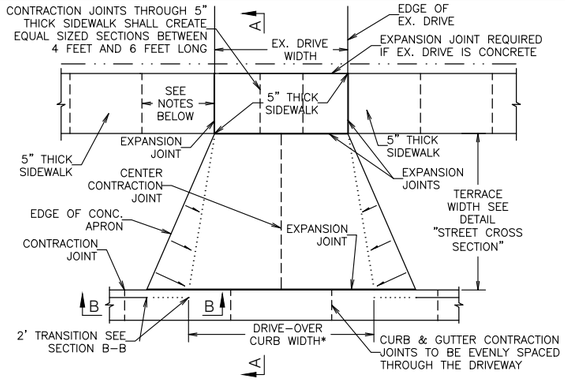


NOTES: – 5" THICK WALK WIDTH SHALL BE EQUAL TO THE EX. DRIVE WIDTH OR A MINIMUM OF 12' CENTERED ON THE EX. DRIVE. THE DRIVE–OVER CURB WIDTH SHALL BE EQUAL TO THE 5" THICK WALK WIDTH PLUS 2', CENTERED ON THE EX. DRIVE.

– CONTRACTION JOINTS IN 5" THICK SIDEWALKS SHALL BE PLACED EVERY 5'. EXPANSION JOINTS SHALL BE PLACED AT INTERVALS NOT TO EXCEED 96 FEET.

PLAN VIEW

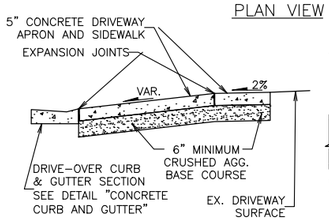


SECTION A–A

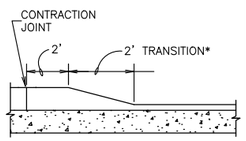


*A 4' TRANSITION IS REQUIRED IF THE TERRACE WIDTH IS LESS THAN 4 FEET

SECTION B–B

## DETAIL
DRIVEWAY

NOTES:
– CURB RAMP SLOPE SHALL BE 1:12 OR FLATTER.

– TEXTURED SURFACE SHALL EXTEND FROM THE CURB & GUTTER SECTION TO THE TRANSVERSE CONTRACTION JOINT AND SHALL BE ¼" TO ⅜" DEEP.

– CONTRACTION JOINTS IN THE CONCRETE CURB & GUTTER SHALL BE EVENLY SPACED EVERY 6–12 FEET.

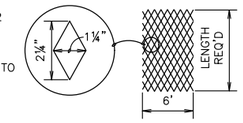


TEXTURE PATTERN

TYPE 1 CURB RAMP

– FOR USE WHEN THE DISTANCE FROM THE BACK OF THE CURB TO THE BACK OF THE SIDEWALK (D) IS LESS THAN 12 FEET.

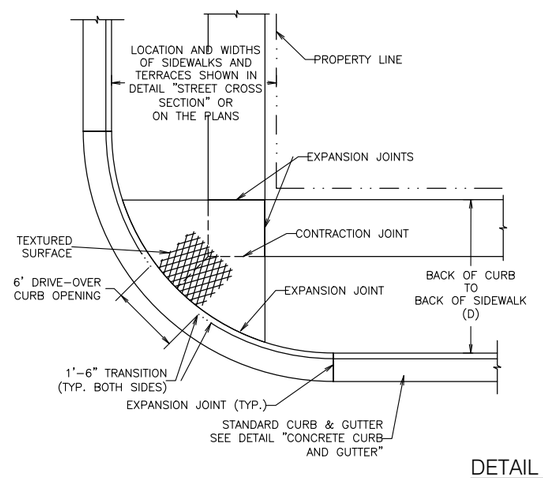


TYPE 2 CURB RAMP

– FOR USE WHEN THE DISTANCE FROM THE BACK OF THE CURB TO THE BACK OF THE SIDEWALK (D) IS GREATER THAN OR EQUAL TO 12 FEET.

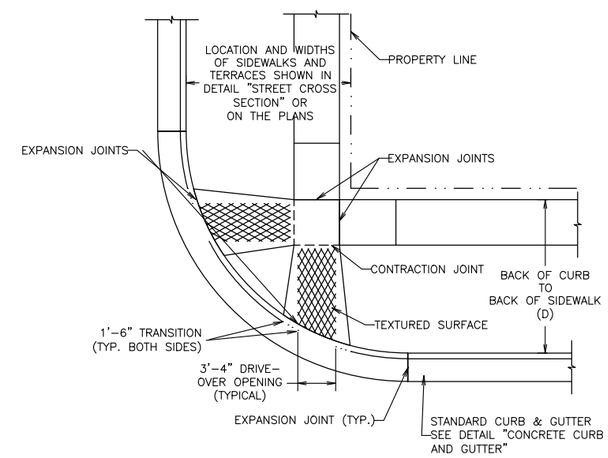


## DETAIL
CURB RAMP

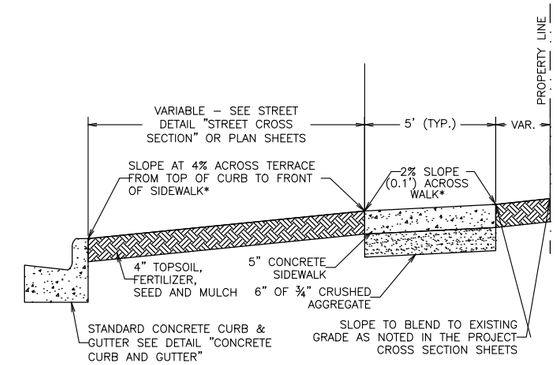


* WHERE PLAN CROSS SECTIONS CONFLICT WITH THIS DETAIL THE PLAN CROSS SECTIONS SHALL GOVERN.

## DETAIL
SIDEWALK - TERRACE SECTION

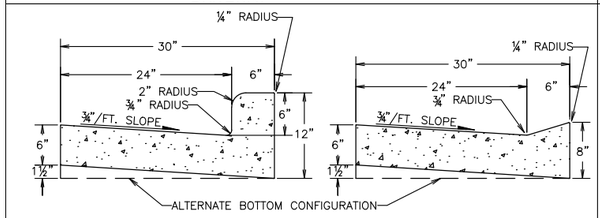


STANDARD CURB & GUTTER CROSS SECTION DIMENSIONS

DRIVE–OVER CURB & GUTTER CROSS SECTION DIMENSIONS

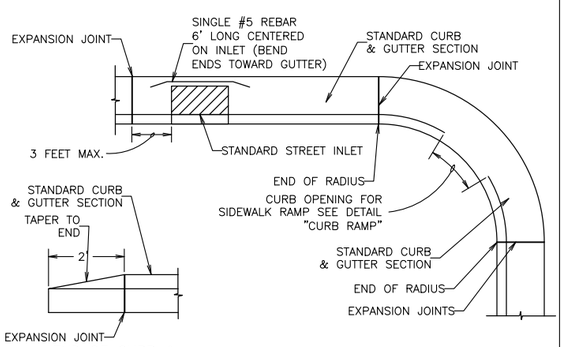


END OF CURB & GUTTER DETAIL

RADIUS & STREET INLET PLAN VIEW

NOTES:
1.) CONTRACTION JOINTS SHALL BE PLACED EVERY 6 TO 12 FEET AND AT LOCATIONS SHOWN IN THE CURB RAMP AND DRIVEWAY DETAILS.
2.) EXPANSION JOINTS SHALL BE PLACED AT EVERY END OF RADIUS, 3 FEET ON ONE SIDE OF EACH STREET INLET AND AT INTERVALS NOT TO EXCEED 300 FEET.

## DETAIL
CONCRETE CURB AND GUTTER

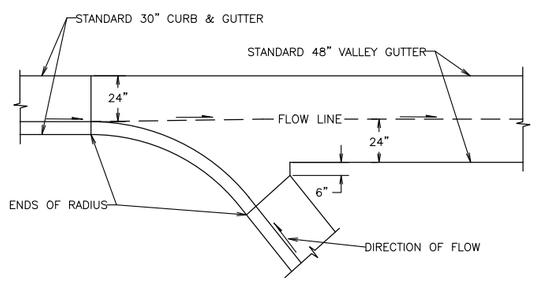


VALLEY GUTTER PLAN VIEW

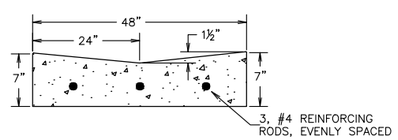


STANDARD VALLEY GUTTER CROSS SECTION DIMENSIONS

## DETAIL
VALLEY GUTTER

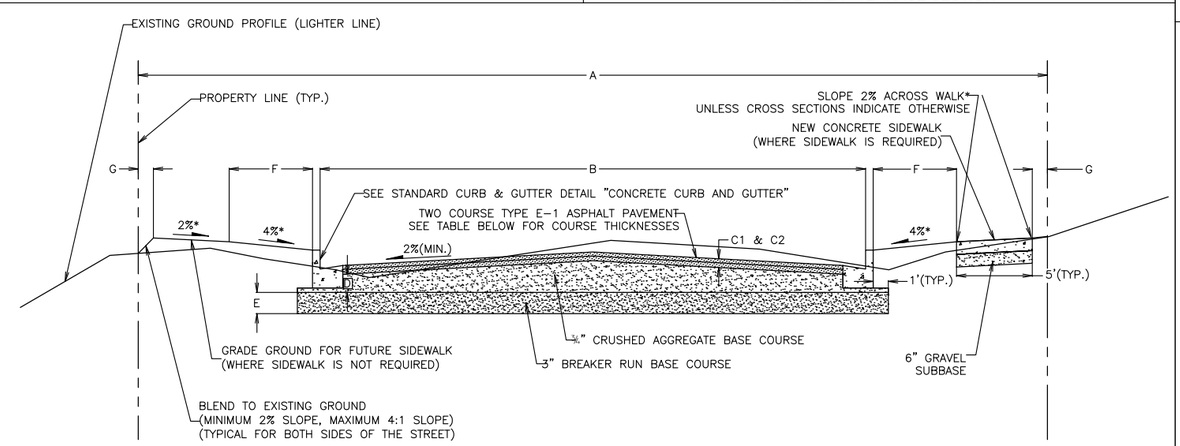


STANDARD STREET DETAIL DIMENSIONS

| STREET NAME | A RIGHT OF WAY WIDTH | B CURB FACE TO CURB FACE WIDTH | C1 LOWER COURSE THICKNESS | C2 SURFACE COURSE THICKNESS | D ¾" C.A.B.C. THICKNESS* | E 3" BREAKER RUN B.C. THICKNESS | F TERRACE WIDTH | G BACK OF WALK TO PROP. LINE |
|---|---|---|---|---|---|---|---|---|
| | | | 1¾" | 1½" | 6" | 6" MIN. | | 1' |
| | | | | | | | | |
| | | | | | | | | |
| | | | | | | | | |
| | | | | | | | | |
| | | | | | | | | |
| | | | | | | | | |
| | | | | | | | | |

*WHERE PLAN CROSS SECTIONS CONFLICT WITH THIS DETAIL, THE PLAN CROSS SECTION SHALL GOVERN.

NOTES:
THE CROWN OF THE ROAD SHALL BE CREATED USING THE ¾" CRUSHED AGGREGATE BASE COURSE. THE THICKNESS SHOWN IS THE MINIMUM THICKNESS REQUIRED AS MEASURED AT THE CONCRETE CURB & GUTTER SECTION.

THE 3" BREAKER RUN BASE COURSE THICKNESS MAY NEED TO BE INCREASED DEPENDING UPON SUBGRADE CONDITIONS.

PRELIMINARY

## DETAIL
STREET CROSS SECTION


TOWN & COUNTRY ENGINEERING, INC.
2912 Marketplace Drive
Suite 103
Madison, WI 53719
(608) 273-3350
www.tcengineers.net


STANDARD CONSTRUCTION DETAILS
STREET IMPROVEMENTS

20XX STREET AND UTILITY IMPROVEMENTS
Street Name, Street Name, Street Name
Village of McFarland, Wisconsin

PROJECT NO.: ## ##
DRAWING FILE: MC 160 DETAILS.DWG
DRAWN BY: X.X.X.
CHECKED BY: X.X.X.
DATE: X–X–XX
REVISIONS:
SCALE: N.T.S.
SHEET: A5

EXISTING CONTOURS ARE DENOTED BY LIGHTER LINES.
FINISHED CONTOURS ARE DENOTED BY DARKER LINES.
DRIVE OVER CURB ELEVATIONS ARE LABELED AT FULL CURB HEIGHT.

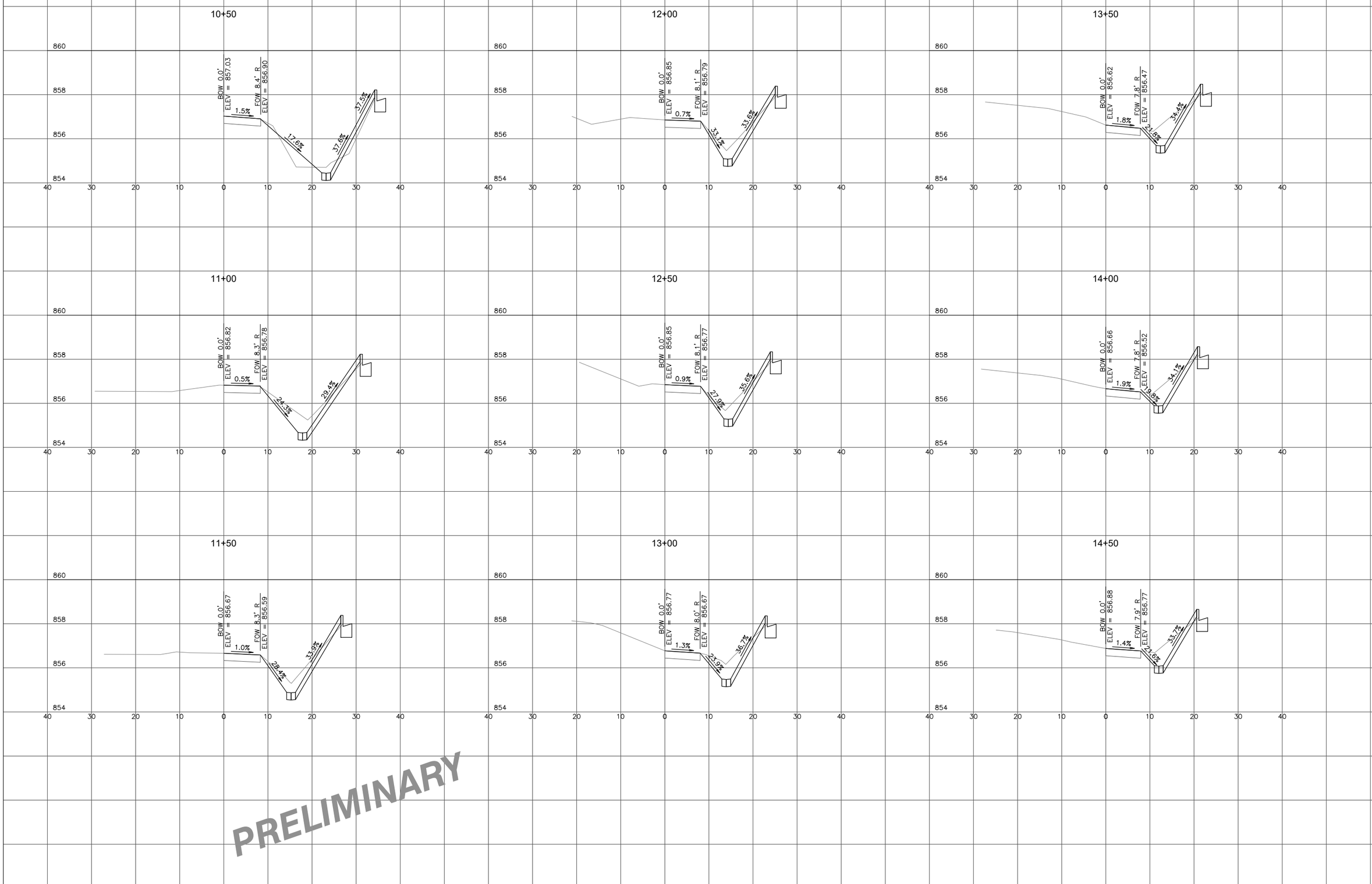


PRELIMINARY


TOWN & COUNTRY ENGINEERING, INC.
2912 Marketplace Drive
Suite 103
Madison, WI 53719
(608) 273-3350
www.tcengineers.net


CROSS SECTIONS
CREAMERY ROAD
Station 10+50 To Station 14+50

2020 STREET AND UTILITY IMPROVEMENTS
CREAMERY RD AND ELVEHJEM RD
Village of McFarland, Wisconsin

PROJECT NO.: MC 160
DRAWING NO.: MC 160 SHEETS.DWG
DRAWN BY: J.R.K.
CHECKED BY: B.R.B.
DATE: 10-29-19
REVISIONS:
SCALE: HORIZONTAL 0 2.5 5 10
VERTICAL 1 2
SHEET: X1

EXISTING CONTOURS ARE DENOTED BY LIGHTER LINES.
FINISHED CONTOURS ARE DENOTED BY DARKER LINES.
DRIVE OVER CURB ELEVATIONS ARE LABELED AT FULL CURB HEIGHT.

PRELIMINARY

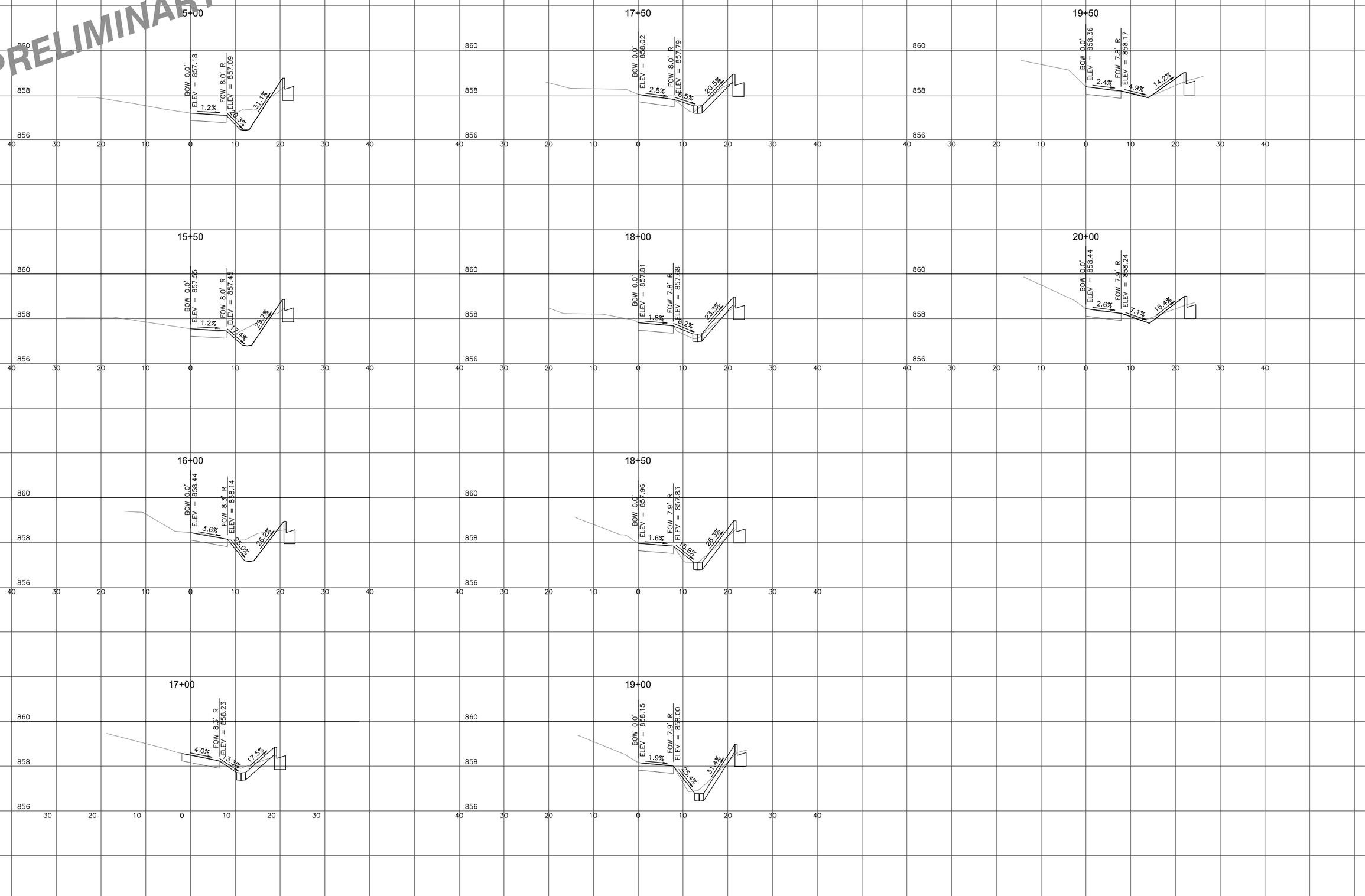



2912 Marketplace Drive
Suite 103
Madison, WI 53719
(608) 273-3350
www.tcengineers.net
TOWN & COUNTRY ENGINEERING, INC.


CROSS SECTIONS
CREAMERY ROAD
Station 15+00 To Station 20+00

2020 STREET AND UTILITY IMPROVEMENTS
CREAMERY RD AND ELVEHJEM RD
Village of McFarland, Wisconsin

PROJECT NO.: MC 160
DRAWING NO.: MC 160 SHEETS.DWG
DRAWN BY: J.R.K.
CHECKED BY: B.R.B.
DATE: 10-29-19
REVISIONS:
SCALE: HORIZONTAL 0 2.5 5 10
VERTICAL 1 2
SHEET: X2

PRELIMINARY

EXISTING CONTOURS ARE DENOTED BY LIGHTER LINES.
FINISHED CONTOURS ARE DENOTED BY DARKER LINES.
DRIVE OVER CURB ELEVATIONS ARE LABELED AT FULL CURB HEIGHT.

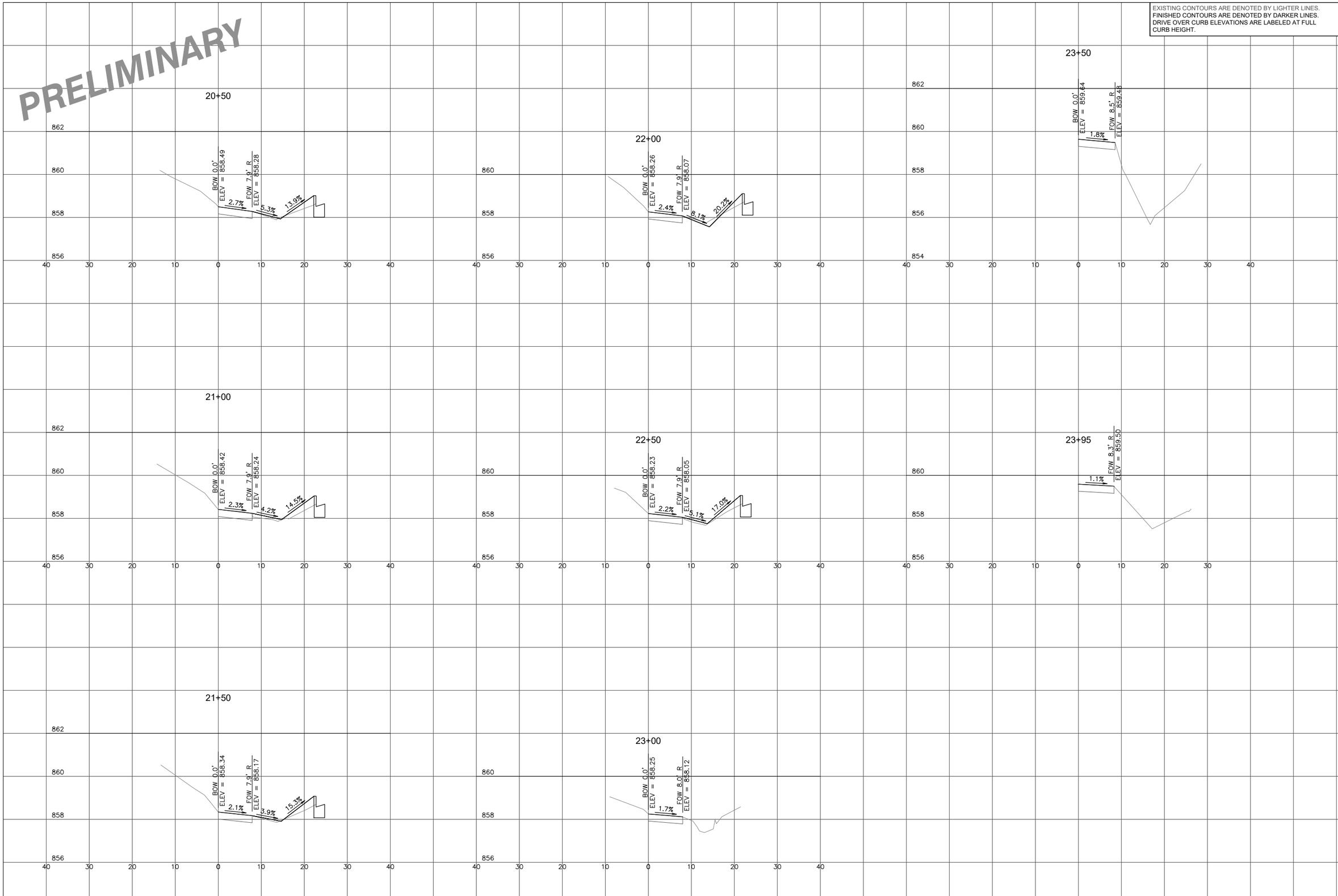



TOWN & COUNTRY ENGINEERING, INC.
2912 Marketplace Drive
Suite 103
Madison, WI 53719
(608) 273-3350
www.tcengineers.net


CROSS SECTIONS
CREAMERY ROAD
Station 20+50 To Station 23+95

2020 STREET AND UTILITY IMPROVEMENTS
CREAMERY RD AND ELVEHJEM RD
Village of McFarland, Wisconsin

| | |
|---|---|
| PROJECT NO.: | MC 160 |
| DRAWING FILE: | MC 160 SHEETS.DWG |
| DRAWN BY: | J.R.K. |
| CHECKED BY: | B.R.B. |
| DATE: | 10-29-19 |
| REVISIONS: | |
| SCALE: HORIZONTAL | 0 2.5 5 10 |
| VERTICAL | 1 2 |
| SHEET: | X3 |

VILLAGE OF
McFarland

# VILLAGE BOARD SUMMARY SHEET

**MEETING DATE:** **Tuesday, December 17, 2019**

**SECTION:** **Business**

**DEPARTMENT:** **Public Works**

**CONTACT:** **Jim Hessling, Public Works Director**

**AGENDA ITEM:** **Discussion and action to make a recommendation to the Village Board regarding a the Request For Proposals for yard waste and drop off site services**

**PREVIOUS ACTION:**
None

**ISSUE SUMMARY:**
The yard waste drop off site contract expires at the end of December 2019. Public Works would like the committee to review the attached Request For Proposals to see if the services requested meet the needs of the committee and provide direction on moving forward.

**FINANCIAL/BUDGET IMPACT:**

**VILLAGE PLAN REFERENCE:**

**ORDINANCE REFERENCE:**
Funds to operate the yard waste site have been included in the 2020 budget.

**BOARD, COMMISSION OR COMMITTEE RECOMMENDATION:**

**ATTACHMENTS:**
1. Brush - Yardwaste - RFP - for 2020 Jim H

# VILLAGE OF MCFARLAND

# *2020*
# *Brush and Yardwaste*
# *Request for Proposals*

# REQUEST FOR PROPOSALS

## 1. OVERVIEW

### 1.1 Request for Proposals

The Village of McFarland (hereinafter "Village"), Dane County, Wisconsin, municipal corporation acting under its statutory home-rule powers, is seeking proposals for the provision of comprehensive, high quality brush and yardwaste collection and disposal services.

The Village is requesting proposals for both a one year and three year contract. Because of the uncertainty over available funding, proposals are also being sought on four different levels of curbside and drop-off site services.

The deadline for returning proposals is 10:00 a.m. on Monday January 13, 2020. All proposals should be returned to the McFarland Municipal Center, 5915 Milwaukee Street, in a sealed envelope, clearly marked "2020 Brush and Yard Waste Proposal".

## OPTION #1
## (One year – 2020)

**YARDWASTE COLLECTION**

Yardwaste collection pricing for curbside pick up.

Pick ups to include:

One Village-wide spring pick up during the week of April 27, 2020.
One Village-wide fall pick up during the week of November 16, 2020.

Hourly cost to include truck, vacuum (if applicable), and labor. $_____

**BRUSH COLLECTION**

Brush collection pricing for curbside pick up.

Pick ups to include:

One spring pick up of three (3) zones starting the week of April 20, 2020
One fall pick up of three (3) zones starting the week of October 26, 2020.

Hourly cost to include truck, chipper, and labor. $_____

**DROP OFF SITE**

Brush and yardwaste collection and disposal at the Village's drop off site located at 5115 Terminal Drive McFarland, Wisconsin.

Lump sum price to service the site with all labor and equipment as needed starting on or before April 1, 2020, and closing on or about December 1, 2020. Hours of operation are 7:00 am to 7:00 pm, seven days a week.

$_____

Deduct if the Village installs a card system, which would activate the gate and only be issued to Village residents.

<$_____>

# OPTION #1A
# (Three year – 2020, 2021, & 2022)

## YARDWASTE COLLECTION

Yardwaste collection pricing for curbside pick up.

Pick ups to include:

One Village-wide spring pick up during the week of April 27, 2020.
One Village-wide spring pick up during the week of April 26, 2021.
One Village-wide spring pick up during the week of April 25, 2022.
One Village-wide fall pick up during the week of November 16, 2020.
One Village-wide fall pick up during the week of November 15, 2021.
One Village-wide fall pick up during the week of November 14, 2022.

Hourly cost to include truck, vacuum (if applicable), and labor. $_____

## BRUSH COLLECTION

Brush collection pricing for curbside pick up.

Pick ups to include:

One spring pick up of three (3) zones starting the week of April 20, 2020.
One spring pick up of three (3) zones starting the week of April 19, 2021.
One spring pick up of three (3) zones starting the week of April 18, 2022.
One fall pick up of three (3) zones starting the week of October 26, 2020.
One fall pick up of three (3) zones starting the week of October 25, 2021.
One fall pick up of three (3) zones starting the week of October 24, 2022.

Hourly costs to include truck, chipper, and manpower $_____

## DROP OFF SITE

Brush and yardwaste collection and disposal at the Village's drop off site located at 5115 Terminal Drive McFarland, Wisconsin.

Lump sum price to service the site with all labor and equipment as needed starting on or before April 1, 2020, 2021, and 2022, and closing on or about December 1, 2020, 2021, and 2022. Hours of operation are 7:00 am to 7:00 pm, seven days a week.

$_____

Deduct if the Village installs a card system, which would activate the gate and only be issued to Village residents.

<$_____>

## OPTION #4
## (One year – 2020)

**DROP OFF SITE ONLY - NO CURBSIDE COLLECTIONS**

Brush and yardwaste collection and disposal at the Village's drop off site located at 5115 Terminal Drive McFarland, Wisconsin.

> Lump sum price to service the site with all labor and equipment as needed starting on or before April 1, 2020, and closing on or about December 1, 2020. Hours of operation are 7:00 am to 7:00 pm, seven days a week.

$_____

Deduct if the Village installs a card system, which would activate the gate and only be issued to Village residents.

<$_____>

## OPTION #4A
## (Three year – 2020, 2021, & 2022)

**DROP OFF SITE ONLY - NO CURBSIDE COLLECTIONS**

Brush and yardwaste collection and disposal at the Village's drop off site located at 5115 Terminal Drive McFarland, Wisconsin.

Lump sum price to service the site with all labor and equipment as needed starting on or before April 1, 2020, 2021, and 2022, and closing on or about December 1, 2020, 2021, & 2022. Hours of operation are 7:00 am to 7:00 pm, seven days a week.

$_____

Deduct if the Village installs a card system, which would activate the gate and only be issued to Village residents.

<$_____>

## OPTION #2
## (One year – 2020)

**YARDWASTE COLLECTION**

Yardwaste collection pricing for curbside pick up.

Pick ups to include:

One Village-wide spring pick up during the week of April 27, 2020.
One Village-wide fall pick up during the week of November 16, 2020.

Hourly costs include truck, vacuum (if applicable), and labor. $_____

**NO CURBSIDE BRUSH COLLECTION**

**DROP OFF SITE**

Brush and yardwaste collection and disposal at the Village's drop off site located at 5115 Terminal Drive McFarland, Wisconsin.

Lump sum price to service the site with all labor and equipment as needed starting on or before April 1, 2020, and closing on or about December 1, 2020. Hours of operation are 7:00 am to 7:00 pm, seven days a week.

$_____

Deduct if the Village installs a card system, which would activate the gate and only be issued to Village residents.

<$_____>

## OPTION #2A
## (Three year – 2020, 2021, & 2022)

**YARDWASTE COLLECTION**

Yardwaste collection pricing for curbside pick up.

Pick ups to include:

One Village-wide spring pick up during the week of April 27, 2020.
One Village-wide spring pick up during the week of April 26, 2021.
One Village-wide spring pick up during the week of April 25, 2022.
One Village-wide fall pick up during the week of November 16, 2020.
One Village-wide fall pick up during the week of November 15, 2021.
One Village-wide fall pick up during the week of November 14, 2022.

Hourly cost to include truck, vacuum (if applicable), and labor. $_____

**NO CURBSIDE BRUSH COLLECTION**

**DROP OFF SITE**

Brush and yardwaste collection and disposal at the Village's drop off site located at 5115 Terminal Drive McFarland, Wisconsin.

Lump sum price to service the site with all labor and equipment as needed starting on or before April 1, 2020, 2021, and 2022, and closing on or about December 1, 2020, 2021, and 2022. Hours of operation are 7:00 am to 7:00 pm, seven days a week.

$_____

Deduct if the Village installs a card system, which would activate the gate and only be issued to Village residents.

<$_____>

## OPTION #3
## (One year – 2020)

**YARDWASTE COLLECTION**

Yardwaste collection pricing for curbside pick up.

Pick ups to include:

One Village-wide spring pick up during the week of April 27, 2020.
One Village-wide fall pick up during the week of November 16, 2020.

Hourly cost to include truck, vacuum (if applicable), and labor. $_____

**BRUSH COLLECTION**

Pay as you go brush collection for curbside pick up.

Pick-ups to include:

One holiday tree pick up in January as requested and paid for.
Curbside collection as requested and paid for.

Hourly cost to include truck, chipper, and manpower $_____

**DROP OFF SITE**

Brush and yardwaste collection and disposal at the Village's drop off site located at 5115 Terminal Drive McFarland, Wisconsin.

Lump sum price to service the site with all labor and equipment as needed starting on or before April 1, 2020, and closing on or about December 1, 2020. Hours of operation are 7:00 am to 7:00 pm, seven days a week.

$_____

Deduct if the Village installs a card system, which would activate the gate and only be issued to Village residents.

<$_____>

## OPTION #3A
## (Three year – 2020, 2021, & 2022)

**YARDWASTE COLLECTION**

Yardwaste collection pricing for curbside pick up.

Pick up to include:

One Village-wide spring pick up during the week of April 27, 2020.
One Village-wide spring pick up during the week of April 26, 2021.
One Village-wide spring pick up during the week of April 25, 2022.
One Village-wide fall pick up during the week of November 16, 2020.
One Village-wide fall pick up during the week of November 15, 2021.
One Village-wide fall pick up during the week of November 14, 2022.

Hourly cost to include truck, vacuum (if applicable), and labor. $_____

**BRUSH COLLECTION**

Pay as you go brush collection for curbside pick up.

Pick up to include:

One holiday tree pick up in January 2020, 2021, and 2022 as requested and paid for.
Curbside collection as requested and paid for.

Hourly cost to include truck, chipper, and labor. $_____

**DROP OFF SITE**

Brush and yardwaste collection and disposal at the Village's drop off site located at 5115 Terminal Drive McFarland, Wisconsin.

Lump sum price to service the site with all labor and equipment as needed starting on or before April 1, 2020, 2021, and 2022, and closing on or about December 1, 2020, 2021, and 2022. Hours of operation are 7:00 am to 7:00 pm, seven days a week.

$_____

Deduct if the Village installs a card system, which would activate the gate and only be issued to Village residents.

<$_____>

VILLAGE OF
McFarland

# VILLAGE BOARD SUMMARY SHEET

**MEETING DATE:** **Tuesday, December 17, 2019**

**SECTION:** **Business**

**DEPARTMENT:** **Public Works**

**CONTACT:**

**AGENDA ITEM:** **Presentation of the Public Works Monthly Report from the Director.**

**PREVIOUS ACTION:**

**ISSUE SUMMARY:**

**FINANCIAL/BUDGET IMPACT:**

**VILLAGE PLAN REFERENCE:**

**ORDINANCE REFERENCE:**

**BOARD, COMMISSION OR COMMITTEE RECOMMENDATION:**

**ATTACHMENTS:**

1. November 2019 directors report

**PUBLIC WORKS COMMITTEE**
**December 10, 2019**

**PUBLIC UTILITIES COMMITTEE**
**December 17, 2019**

**PARKS, RECREATION & NATURAL RESOURCES COMMITTEE**
**December 12, 2019**
**Public Works Directors Report**
**for**
**November 2019**

The following is information concerning events and activities of the Public Works Department along with the Water and Sewer Utilities for the previous month. This information is provided in brief to provide an overview of the highlights.

**New Hire**
The Department of Public Works is pleased to announce Lindsey Krey. Lindsey previously worked for the City of Madison. Welcome Lindsey.

**Snow Events**
The department handled various snow events as listed below.

- November 6 minor plowing and salting
- November 11 minor plowing and salting
- November 17 salting operations

**Employee Appraisals**
All employee appraisals for the public works department were completed in November.

**Water meter testing**
Large water meter testing was performed in the month of November. We have an outside contractor perform these tests are our equipment is not large enough to complete the task.

**Meetings/Training/Seminars**
Hessling participated in the following:
APWA monthly board meeting